PEC Code: 5328-005
COM Code: 408186005
Model: LU5WSAH

AVAYA

5W Self-Amplified Horn Loudspeaker

Description

This horn loudspeaker is a one-way, self-contained amplified paging horn assembly that incorporates a 5-watt amplifier with a volume control. This horn may be used to expand the capability of telephone systems in high noise areas, and is suitable for interior as well as exterior paging applications.

Speaker Installation

STEP 1 - For easier installation, remove the flange (base) from the speaker by unscrewing the wing nut while at the same time pressing inwardly on the wing nut (see Figure 1). Place the flange flush with the mounting surface and mark the location of the three holes with either a marker or chisel. It is important that the three holes be exactly aligned with the flange, otherwise you might stress the base or make the connection unsteady. Insert 3 wall anchors - see diagrams on back for drilling instructions and use of anchors. (Use appropriate hardware for your specific mounting surface.)

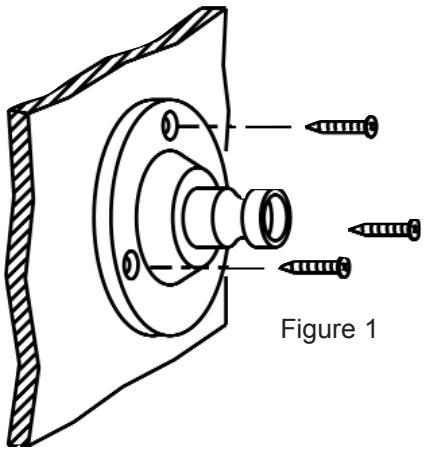

Figure 1

STEP 2 - After mounting the flange, reattach the speaker to the flange and aim the speaker for the desired coverage. A 45° downward angle is recommended, but this may vary depending upon speaker layout. Unless otherwise indicated, do not aim speakers directly at each other or poor paging intelligibility may occur.

STEP 3 - Remove the plastic cover to gain access to the volume control. Using the table to the right and referring to Figure 2 below, make the electrical connection. The red and green wires are dry loop 600-ohm inputs. ***Note:*** *Use 22 AWG shielded, twisted pair on all wire runs.* Use a separate cable for the power and signal connections. Connect the shield of the signal cable to the ground of the audio source. **Do not connect the shield to the speaker** (the shield is only connected at one end).

STEP 4 - Adjust the volume control to the desired setting. Replace the plastic protective cover back over the exposed area.

Wiring Chart

	Lead Color	Function
Power Supply	White	-24V DC
	Black	Ground (Positive)
Telephone	Green	Audio Tip
	Red	Audio Ring

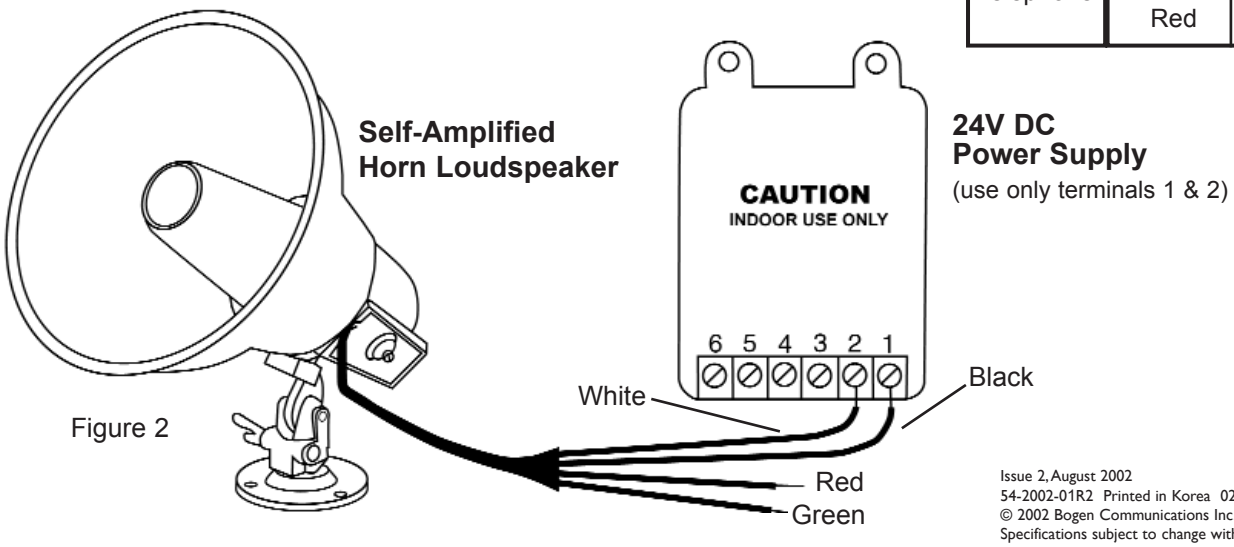

Figure 2

Issue 2, August 2002
54-2002-01R2 Printed in Korea 0208
© 2002 Bogen Communications Inc. All rights reserved.
Specifications subject to change without notice.
Select Code: 701-000-107

Using Anchors with Hollow Walls

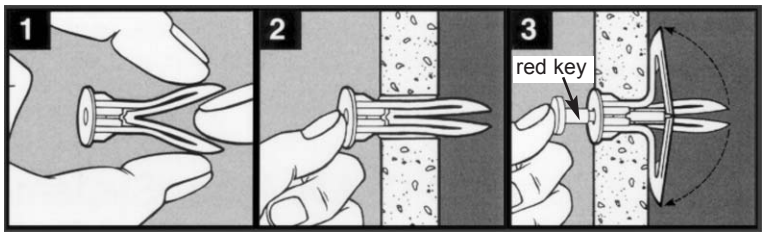

Drill 5/16" diameter hole for each anchor and screw.
Fold and insert anchor in hole (see Figure 1).
Tap anchor until it is flush with the wall (see Figure 2).
Insert red key to pop anchor open behind wall (see Figure 3). DO NOT HAMMER KEY.
Remove key.
Place speaker flange (base) over anchors.
Insert screws and tighten until flush with the mounting surface. Do not over tighten.

Using Anchors with Solid Walls

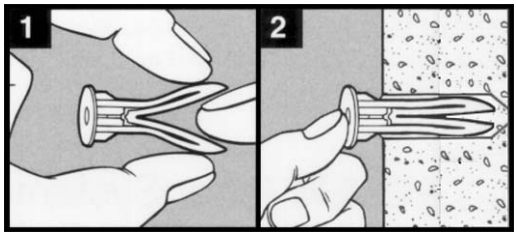

Drill 5/16" diameter hole (minimum hole depth for solid walls is 1 1/2") for each anchor and screw.
Fold and insert anchor in hole (see Figure 1).
Tap anchor until it is flush with the wall (see Figure 2).
Place speaker flange (base) over anchors.
Insert screws and tighten until flush with the mounting surface. Do not over tighten.